R1511

Hardware Manual

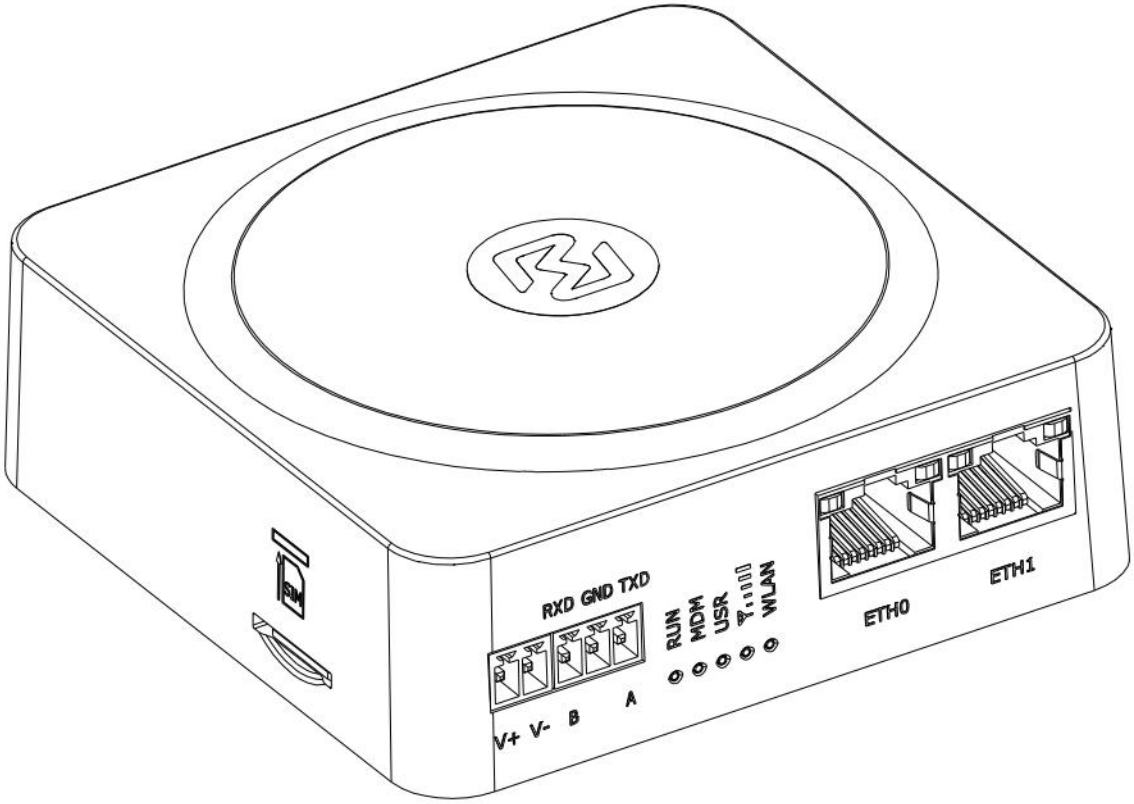

Version: 1.0.3

Date: June 21, 2024

Regulatory and Type Approval Information

Table 1: Toxic or Hazardous Substances or Elements with Defined Concentration Limits

Name of the Part	Hazardous Substances									
	(Pb)	(Hg)	(Cd)	(Cr(VI))	(PBB)	(PBDE)	(DEHP)	(BBP)	(DBP)	(DIBP)
Metal parts	X[1,2]	o	o	o	-	-	-	-	-	-
Circuit modules	o	o	o	o	o	o	o	o	o	o
Cables and cable assemblies	o	o	o	o	o	o	o	o	o	o
Plastic and polymeric parts	o	o	o	o	o	o	o	o	o	o

o:
Indicates that this toxic or hazardous substance contained in all of the homogeneous materials for this part is below the limit requirement in RoHS2.0.
X:
Indicates that this toxic or hazardous substance contained in at least one of the homogeneous materials for this part *might exceed* the limit requirement in RoHS2.0.
-:
Indicates that it does not contain the toxic or hazardous substance.

Note: Excessive lead can be exempted.
1.Copper alloy containing up to 4 % lead by weight (RoHS Exemption 6(c)).
2.Electrical and electronic components containing lead in a glass or ceramic other than dielectric ceramic in capacitors, e.g. piezoelectronic devices, or in a glass or ceramic matrix compound (ROHS Exemption 7(c)-Ⅰ)

Radio Specifications for Europe

Model number: R1511-4L-A02EU

RF technologies	2G, 3G, 4G, Wi-Fi
Cellular Frequency	**2G**: GSM900/GSM1800
	3G: WCDMA: B1/B8
	4G: LTE FDD: B1/B3/B7/B8/B20/B28A LTE TDD: B38/B40/B41
WiFi Frequency	2412MHz ~ 2472MHz
Max RF power	33 dBm±2dB@GSM, 24 dBm+1/-3dB@WCDMA, 23 dBm±2dB@LTE, 18 dBm@Wi-Fi

Model number: R1511-4L-A24EU

RF technologies	2G, 3G, 4G, Wi-Fi
Cellular Frequency*	**2G**: GSM900/GSM1800
	3G: WCDMA: B1/B5/B8
	4G: LTE FDD: B1/B3/B5/B7/B8/B20/B28 LTE TDD: B38/B40/B41
WiFi Frequency	2412MHz ~ 2472MHz
Max RF power	33 dBm±2dB@GSM, 24 dBm+1/-3dB@WCDMA, 23 dBm±2dB@LTE, 18 dBm@Wi-Fi

* ***May vary on difference models.***

Caution: The user is cautioned that changes or modifications not expressly approved by the party responsible for compliance could void the user's authority to operate the equipment.

This device contains licence-exempt transmitter(s)/receiver(s) that comply with Innovation, Science and Economic Development Canada's licence-exempt RSS(s) and Part 15 of the FCC Rules. Operation is subject to the following two conditions:
(1) This device may not cause interference.
(2) This device must accept any interference, including interference that may cause undesired operation of the device.
L'émetteur/récepteur exempt de licence contenu dans le présent appareil est conforme aux CNR d'Innovation, Sciences et Développement économique Canada applicables aux appareils radio exempts de licence. L'exploitation est autorisée aux deux conditions suivantes :
(1) L'appareil ne doit pas produire de brouillage;
(2) L'appareil doit accepter tout brouillage radioélectrique subi, même si le brouillage est susceptible d'en compromettre le fonctionnement.

Note: This equipment has been tested and found to comply with the limits for a Class B digital device, pursuant to Part 15 of the FCC Rules. These limits are designed to provide reasonable protection against harmful interference in a residential installation. This equipment generates, uses and can radiate radio frequency energy and, if not installed and used in accordance with the instructions, may cause harmful interference to radio communications. However, there is no guarantee that interference will not occur in a particular installation.
If this equipment does cause harmful interference to radio or television reception, which can be determined by turning the equipment off and on, the user is encouraged to try to correct the interference by one or more of the following measures:
-- Reorient or relocate the receiving antenna.
-- Increase the separation between the equipment and receiver.
-- Connect the equipment into an outlet on a circuit different from that to which the receiver is connected.
-- Consult the dealer or an experienced radio/TV technician for help.

FCC& IC Radiation Exposure Statement

This equipment complies with FCC and Canada radiation exposure limits set forth for an uncontrolled environment. This equipment should be installed and operated with a minimum distance of 20cm between the radiator and your body.
This transmitter must not be co-located or operating in conjunction with any other antenna or transmitter.

Déclaration d'IC sur l'exposition aux radiations

Cet équipement est conforme aux limites d'exposition aux radiations définies par le Canada pour des environnements non contrôlés. Cet équipement doit être installé et utilisé à une distance minimum de 20 cm entre l'antenne et votre corps.

Cet émetteur ne doit pas être installé au même endroit ni utilisé avec une autre antenne ou un autre émetteur.

Simplified EU & UK Declaration of Conformity

We, Guangzhou Robustel Co., Ltd. are located at 501, Building #2, 63 Yongan Road, Huangpu District, Guangzhou, China, declare that this radio equipment complies with EU Radio Equipment Directive (RED) 2014/53/EU, Low Voltage Directive (LVD) 2014/35/EU, EMC Directive 2014/30/EU, UK Radio Equipment Regulations 2017, EMC Regulations 2016, Electrical Equipment (Safety) Regulations 2016. The full text of the EU& UK DoC is available at the following internet address:

www.robustel.com/certifications/

Safety Information

General

- The router generates radio frequency (RF) power. When using the router, care must be taken on safety issues related to RF interference as well as regulations of RF equipment.
- Do not use your router in aircraft, hospitals, petrol stations or in places where using cellular products is prohibited.
- Be sure that the router will not be interfering with nearby equipment. For example: pacemakers or medical equipment. The antenna of the router should be away from computers, office equipment, home appliance, etc.
- An external antenna must be connected to the router for proper operation. Only uses approved antenna with the router. Please contact authorized distributor on finding an approved antenna.

RF Exposure

- This device meets the official requirements for exposure to radio waves. This device is designed and manufactured not to exceed the emission limits for exposure to radio frequency (RF) energy set by authorized agencies.
- The device must be used with a minimum separation of 20 cm from a person's body to ensure compliance with RF exposure guidelines. Failure to observe these instructions could result in your RF exposure exceeding the applicable limits.

Note: Some airlines may permit the use of cellular phones while the aircraft is on the ground and the door is open. Router may be used at this time.

The symbol indicates that the product should not be mixed with general household waste but must be sent to separate collection facilities for recovery and recycling.

The symbol indicates that the product meets the requirements of the applicable EU directives.

The symbol indicates that the product meets the requirements of the relevant UK legislation.

⚠WARNING:

This product can expose you to chemicals including Lead, known to the State of California to cause cancer and birth defects or other reproductive harm. For more information go to www.P65Warnings.ca.gov.

Related download link

Find more product documents or tools at:
www.robustel.com/documentation/

Technical Support

Tel: 400-987-3791
Email: support@robustel.com
Web: www.robustel.com

Document History

Updates between document versions are cumulative. Therefore, the latest document version contains all updates made to previous versions.

Date	Document Version	Change Description
July 6, 2022	1.0.0	Initial release.
Nov. 23, 2022	1.0.1	Added declaration for product.
July 14, 2023	1.0.2	Modified declaration for product.
June 21, 2024	1.0.3	Modified declaration for product and Added new model for EU.

Overview

Robustel R1511 industrial-grade cellular VPN wireless router supports GSM 2G network, WCDMA 3G network, LTE 4G network to provide high-speed wireless network bandwidth for devices through wireless connection.

Package Checklist

Before commencing installation ensure your package has the following components:

Device	2-PIN Terminal Block	3-PIN Terminal Block	SIM Card Sticker	Quick Start Guide Card
	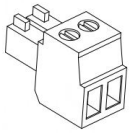	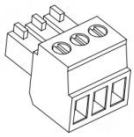	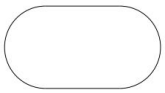	

RCMS Card	QC Card	Mounting Kit (Optional)	Wi-Fi Antenna (Optional)	Power Supply (Optional)
		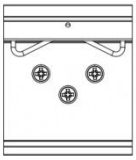		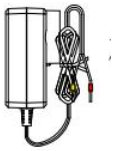

Cellular Antenna (Optional)	Ethernet Cable (Optional)
	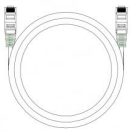

Note: The accessories could be different on specific order.

Panel Layout (May Vary on Difference Models)

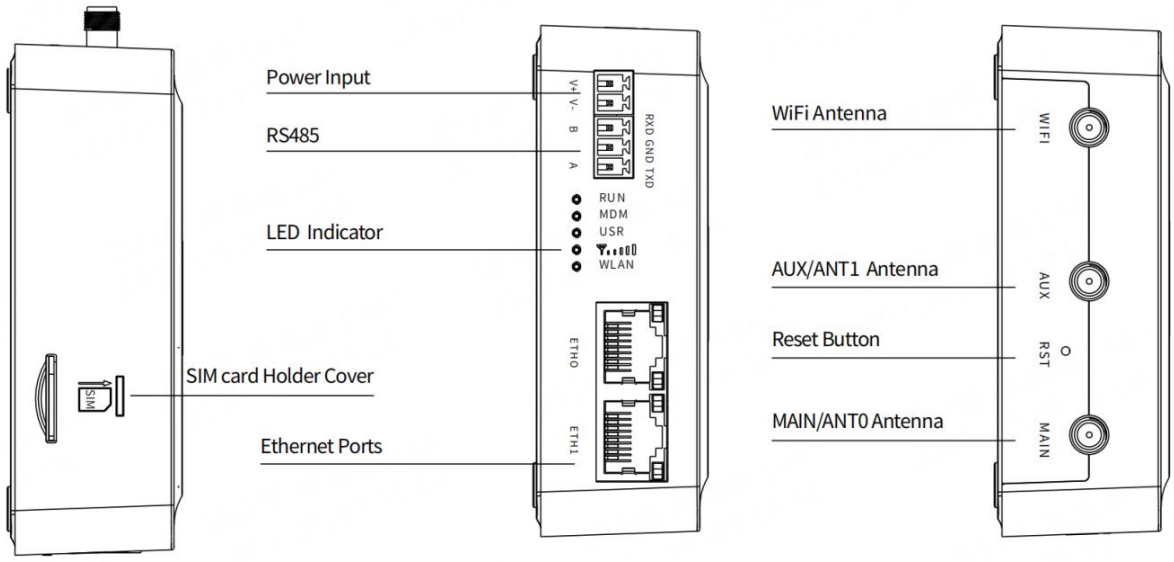

Interface Descriptions

1. PIN Description

PIN	Description	Note	
1	V+	Power Supply Positive	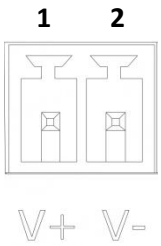 Note: 1) The input voltage is 9 to 36V DC (Without ignition sensing)
2	V-	Power Supply Negative	
3	RXD/B	RS232 Data Receive/RS485_B, may vary on different model.	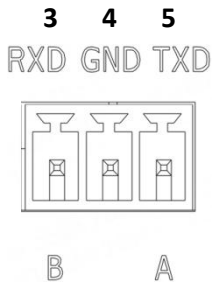
4	GND	Signal Ground	
5	TXD/A	RS232 Data Transmission/RS485_A, may vary on different model.	

2. LED Indicator

Name	Color	Status	Description
RUN	Green	On, solid	Router is powered on (System is initializing)
		On, blinking	Router starts operating
		Off	Router is powered off
MDM	Green	On, solid	Link connection is working
		On, blinking	Data is sent and received.
		Off	Link connection is not working
RSSI	Green	On, solid	Received Signal Strength Indication 20 to 31 dB (Strong signal)
		On, blinking	Received Signal Strength Indication 10 to 19 dB (Moderate signal)
		Off	No signal or Received Signal Strength Indication 1 to 9 dB (Weak signal)
WLAN	Green	On, solid	Wi-Fi is enabled and working properly
		On, blinking	Data is being transferred
		Off	Wi-Fi is disabled or not working properly
USR	Green	User-defined LED. It can be used to indicate SIM card, OpenVPN, IPSec connection status, or status in self-developed applications. You can choose the display type of USR LED. For more details, please refer to ***RT123_SM_RobustOS Software Manual*: *Services > Advanced > System >System Settings > User LED Type.***	

3. Reset Button

Feature	Operation
Reboot	Press and hold the RST button for 2~ 5 seconds under the operating status.
Restore to default configuration	Press and hold the RST button for 5~10 seconds, the RUN LED starts blinking quickly, the router will restore to default configuration.
Restore to factory default settings	Once the operation of restoring default configuration is performed twice within one minute, the router will restore to factory default settings.
Note: The more details please refer to ***RT123_SM_RobustOS Software Manual, 2.3 Factory Reset.***	

4. Ethernet Ports. There are two Ethernet ports on R1511, including ETH0 (WAN/LAN), and ETH1. Each has two LED indicators. The green one is a link indicator but the yellow one doesn't mean anything (always off). For details about status, see the table below.

ETH LED Indicator	Status	Description
Link indicator (Green)	On, solid	Connection is established
	On, blinking	Data is being transferred
	Off	Connection is not established

Hardware Installation

1. **SIM Card Installation**. Insert the SIM cards into the device, then stick the sticker.

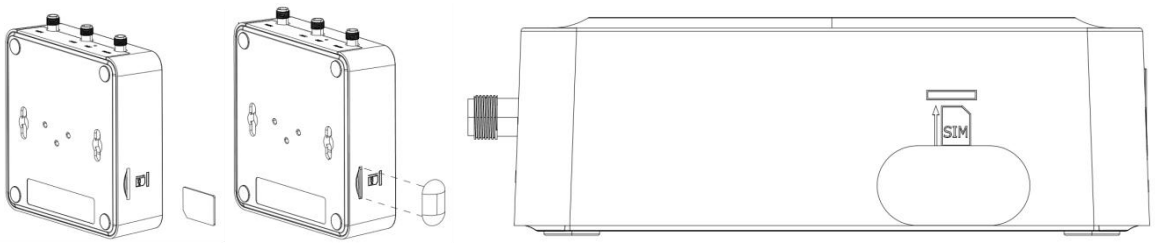

2. **Antenna Installation.** Rotate the antenna into the antenna connector accordingly.

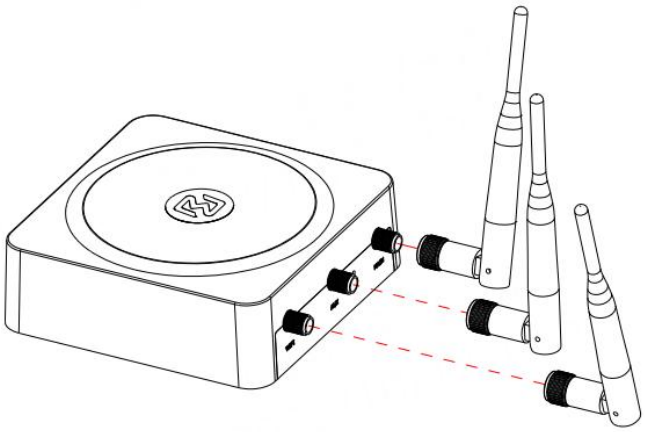

3. **Terminal Block Installation.** Insert the 2PIN, 3PIN terminal blocks into the interfaces connector.

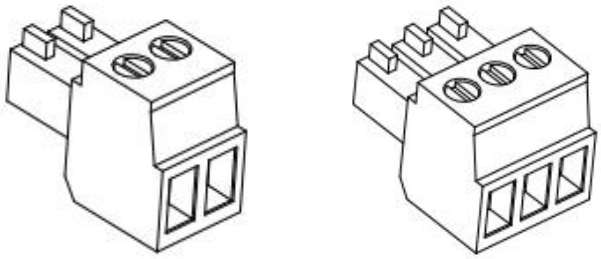

4. **Mounting Kit installation.**

① Wall mounting

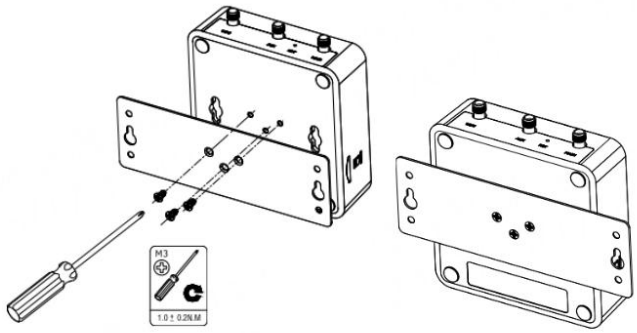

② DIN rail mounting

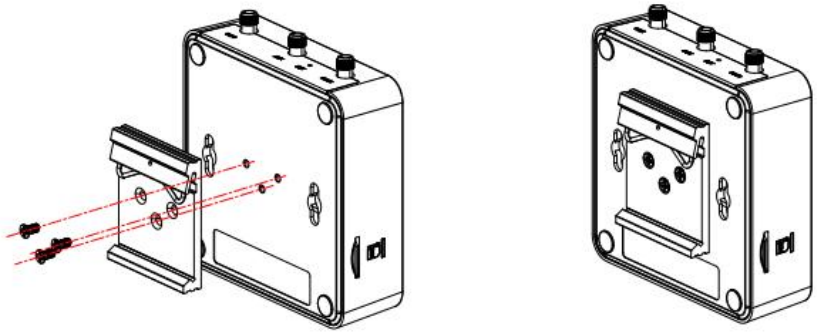

5. Connect the Router to a Computer

Connect a standard Ethernet cable to the port marked ETH0~ETH1 at the front of the R1511 Router, and connect the other end of the cable to your computer.

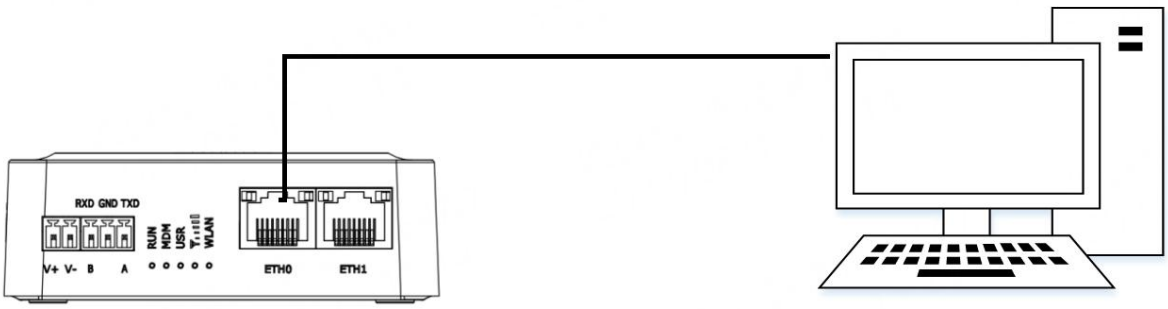

6. Power Supply installation. There are two cables associated with the power adapter. Following to the color of the head, connect the cable marked red to the positive pole through a terminal block, and connect the yellow one to the negative in the same way.

Note: The range of power voltage is 9 to 36V DC.

CONNECTING THE POWER CABLE

COLOR	POLARITY
RED	+
YELLOW	-

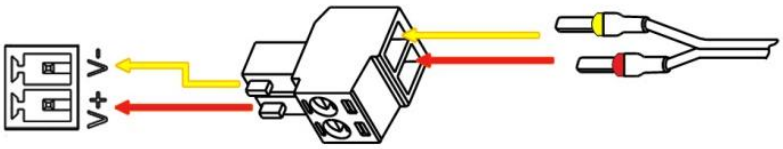

Login to the Device

1. Connect the router's Ethernet port to a PC with a standard Ethernet cable.

2. Before logging in, manually configure the PC with a static IP address on the same subnet as the gateway address, click and configure "Use the following IP address".

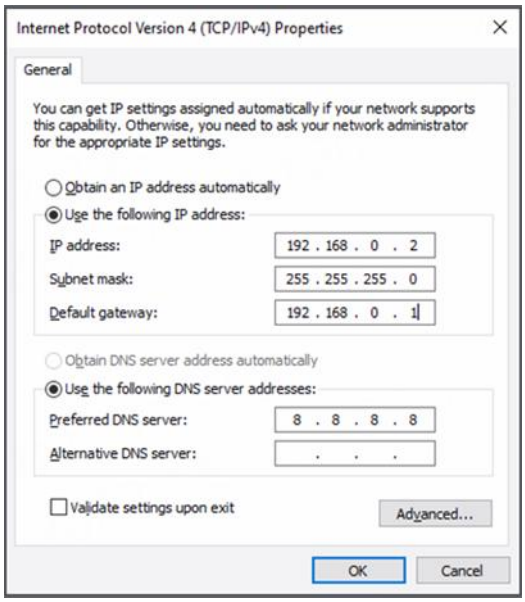

3. To enter the gateway's web interface, type http://192.168.0.1 into the URL field of your Internet browser.

4. Use login information shown in the product label when prompted for authentication.

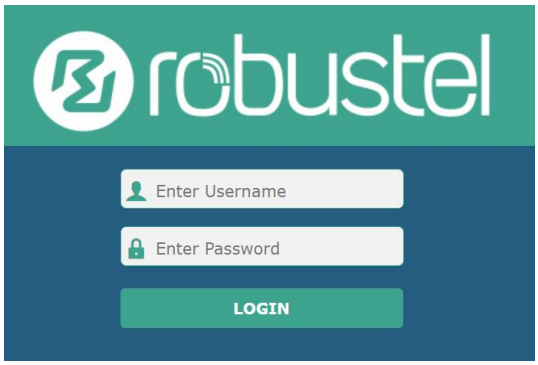

5. After logging in, the home page of the web interface is displayed, then you can view system information and perform configuration on the device.

6. The automatic APN selection is ON by default, if need to specify your own APN, please go to the menu **Interface->Link Manager->Link Setting->WWAN Settings** to finish the specific setting.

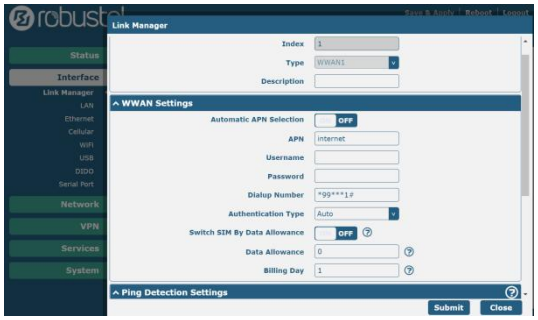

7. The more configuration details please refer to ***RT123_SM_RobustOS Software Manual***. (END)

©2024 Guangzhou Robustel Co.,Ltd.
All rights reserved. Subject to change without notice.